zenith®

Brushed Nickel Framed Medicine Cabinet
Menard's SKU: 677-5230
Model #: MRS2430

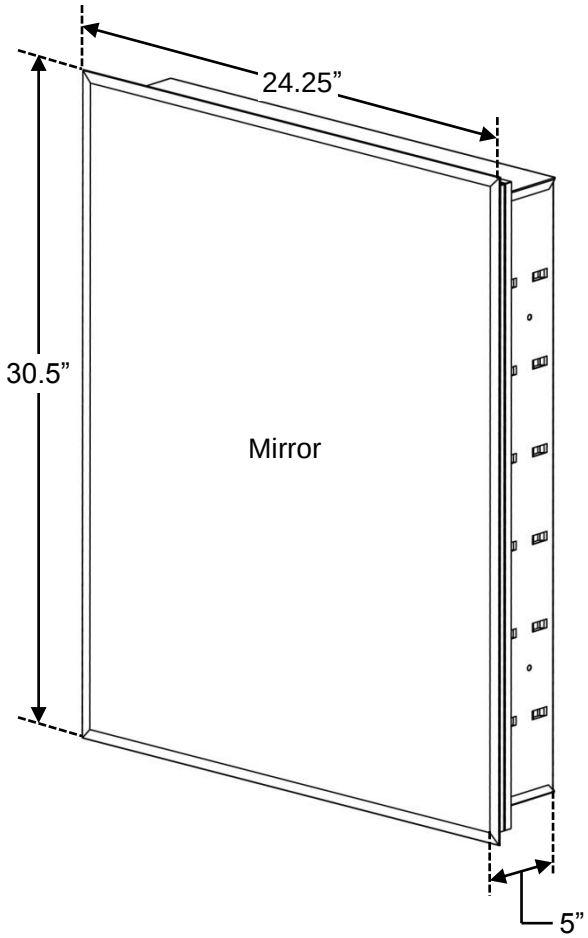

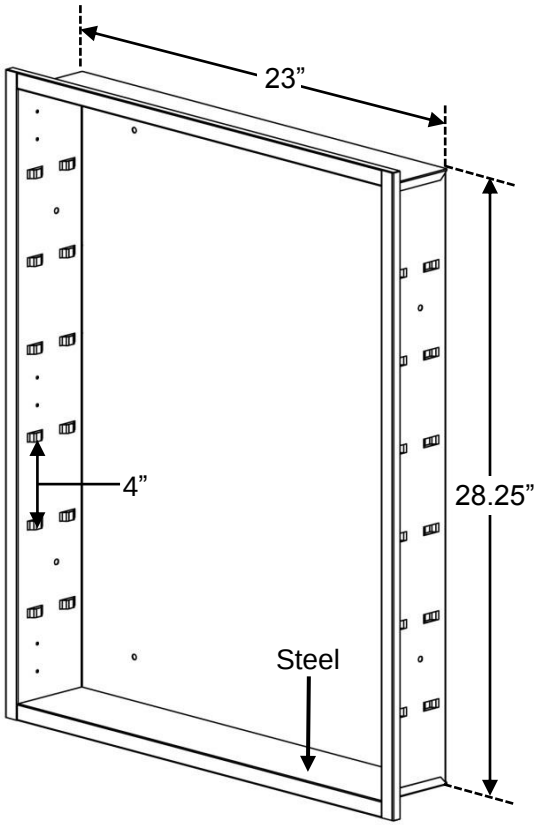

© 2016 Zenith Products Corp. All Rights Reserved.

All dimensions are subject to change and variation without notice.